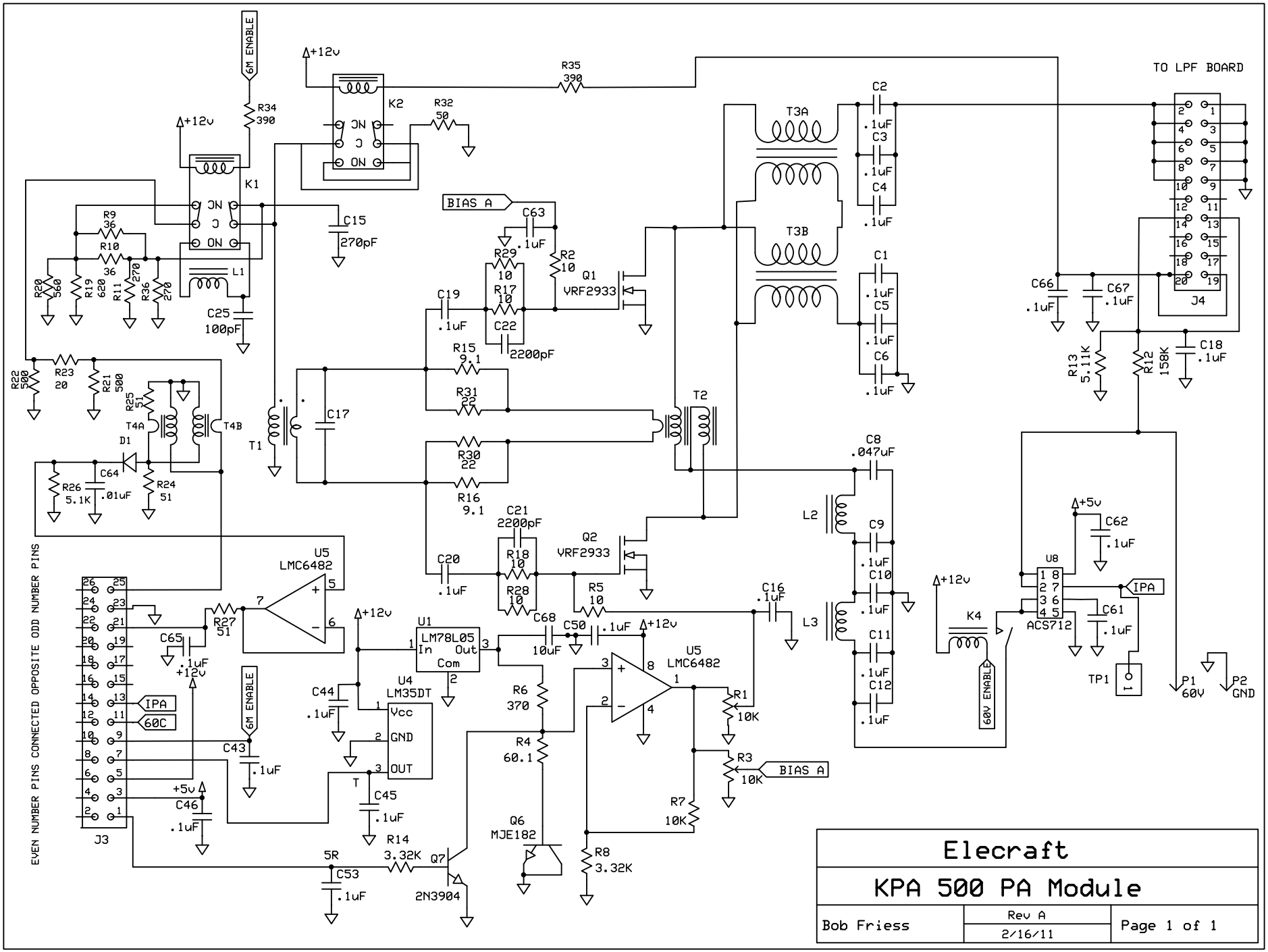
6M ENABLE
+12v
R34
390
K1
NC
C
NO
R9
36
R10
36
R20
560
R19
620
R11
270
R36
270
L1
C25
100pF
C15
270pF
K2
R32
50
R35
390
TO LPF BOARD
BIAS A
C63
.1uF
R29
10
R2
10
R17
10
C22
2200pF
Q1
VRF2933
C19
.1uF
R15
9.1
R31
22
R30
22
R16
9.1
C17
T1
T2
T3A
T3B
C2
.1uF
C3
.1uF
C4
.1uF
C1
.1uF
C5
.1uF
C6
.1uF
C66
.1uF
C67
.1uF
J4
R13
5.11K
R12
158K
C18
.1uF
R22
500
R23
20
R21
500
R25
51
T4A
T4B
D1
C64
.01uF
R26
5.1K
R24
51
C21
2200pF
R18
10
R28
10
C20
.1uF
Q2
VRF2933
R5
10
C16
.1uF
C8
.047uF
L2
C9
.1uF
C10
.1uF
L3
C11
.1uF
C12
.1uF
U5
LMC6482
R27
51
C65
.1uF
+12v
U1
LM78L05
In
Out
Com
C68
10uF
C50
.1uF
U4
LM35DT
Vcc
GND
OUT
C44
.1uF
C43
.1uF
C45
.1uF
R6
370
R4
60.1
Q6
MJE182
R1
10K
R3
10K
R7
10K
R8
3.32K
R14
3.32K
Q7
2N3904
5R
C53
.1uF
C46
.1uF
+5v
IPA
60C
J3
EVEN NUMBER PINS CONNECTED OPPOSITE ODD NUMBER PINS
K4
60V ENABLE
U8
ACS712
C62
.1uF
C61
.1uF
TP1
P1
60V
P2
GND
Elecraft
KPA 500 PA Module
Bob Friess
Rev A
2/16/11
Page 1 of 1